RCJY35-N INA

Ball bearing units

TYPE: Housing units, Four-bolt flanged housing units, Cast iron housing, Radial insert ball bearing with grub screws in inner ring, Type RCJY (INA)

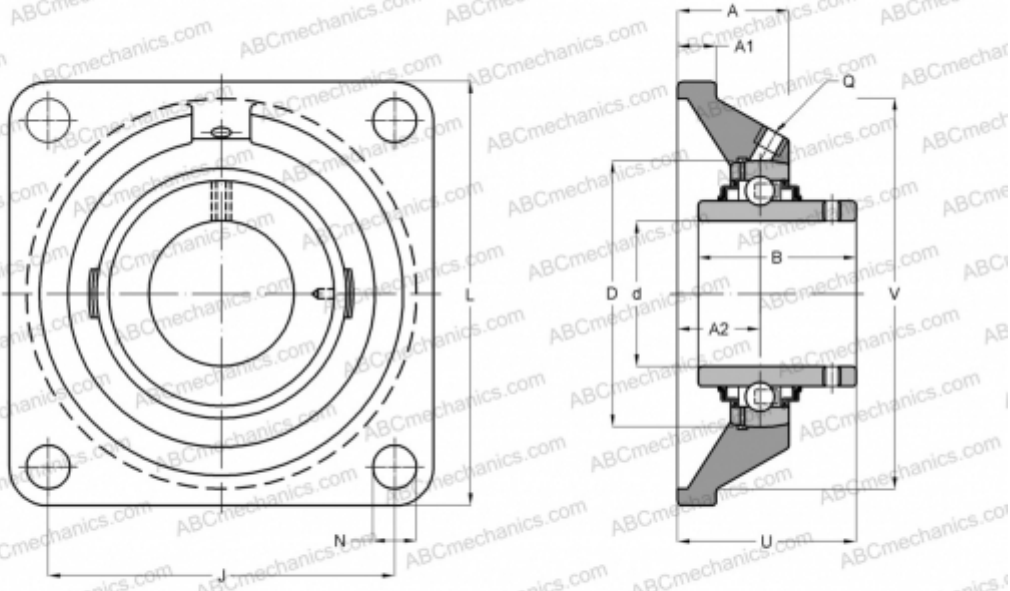

Technical specification

DIMENSIONS, MM	
d	35,000
D	72,000
B	42,900
L	118,000
A	30,500
J	92,000
A1	12,500
A2	21,000
N	14,000
U	46,400
V	100,000
Q	Rp1/8
WEIGHT, KG	1,440

Bearing	GYE35-KRR-B
Housing	GG.CJ07-N
MANUFACTURER	INA
CALCULATION DATA	
Basic dynamic load rating, C	25,500 kN
Basic static load rating, Co	15,300 kN