RCJY35-JIS INA

Ball bearing units

TYPE: Housing units, Four-bolt flanged housing units, Cast iron housing, Radial insert ball bearing with grub screws in inner ring, Type RCJY..-JIS (INA)

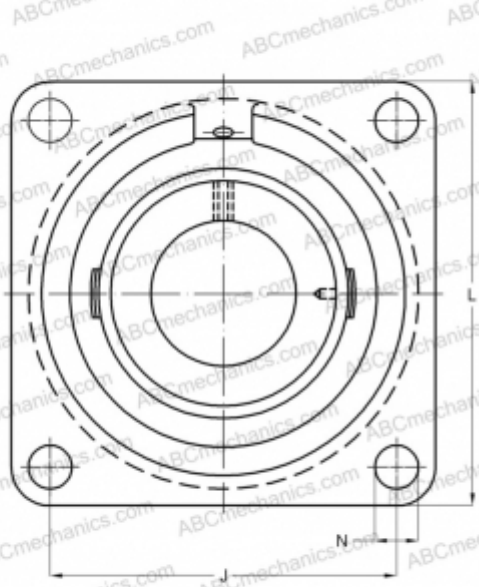

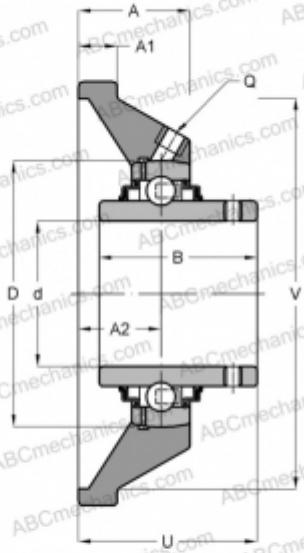

Technical specification

DIMENSIONS, MM	
d	35,000
D	72,000
B	42,900
L	117,000
A	34,000
J	92,000
A1	16,000
A2	19,000
N	14,000
U	44,400
Q	M6
WEIGHT, KG	1,470
Bearing	GYE35-KRR-B-FA107
Housing	GG.F207
MANUFACTURER	INA

CALCULATION DATA	
Basic dynamic load rating, C	25,500 kN
Basic static load rating, Co	15,300 kN