PMEY25-N INA

Ball bearing units

TYPE: Housing units, Four-bolt flanged housing units, Cast iron housing, Radial insert ball bearing with grub screws in inner ring, Centring spigot, type PMEY (INA)

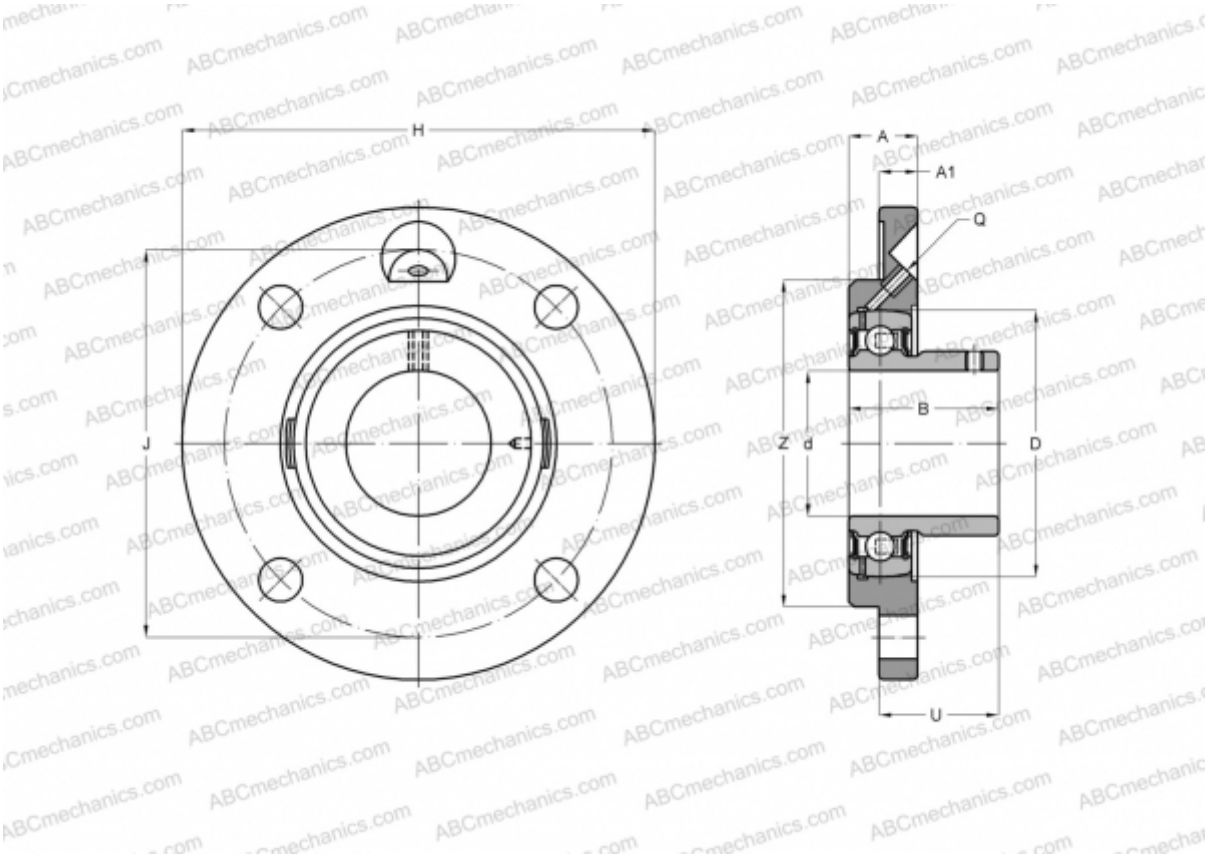

Technical specification

DIMENSIONS, MM	
d	25,000
D	52,000
B	27,000
H	115,000
A	19,000
J	90,000
A1	9,000
N	9,000
U	17,000
Z	70,000
Q	M6
WEIGHT, KG	0,700
Bearing	GAY25-NPP-B
Housing	GG.ME05-N
Protective cover	KASK05
MANUFACTURER	INA

CALCULATION DATA	
Basic dynamic load rating, C	14,000 kN
Basic static load rating, Co	7,800 kN