PTUE30 INA

Ball bearing units

TYPE: Housing units, Take-up housing units, Cast iron housing, Radial insert ball bearing with eccentric locking collar, Type PTUE (INA)

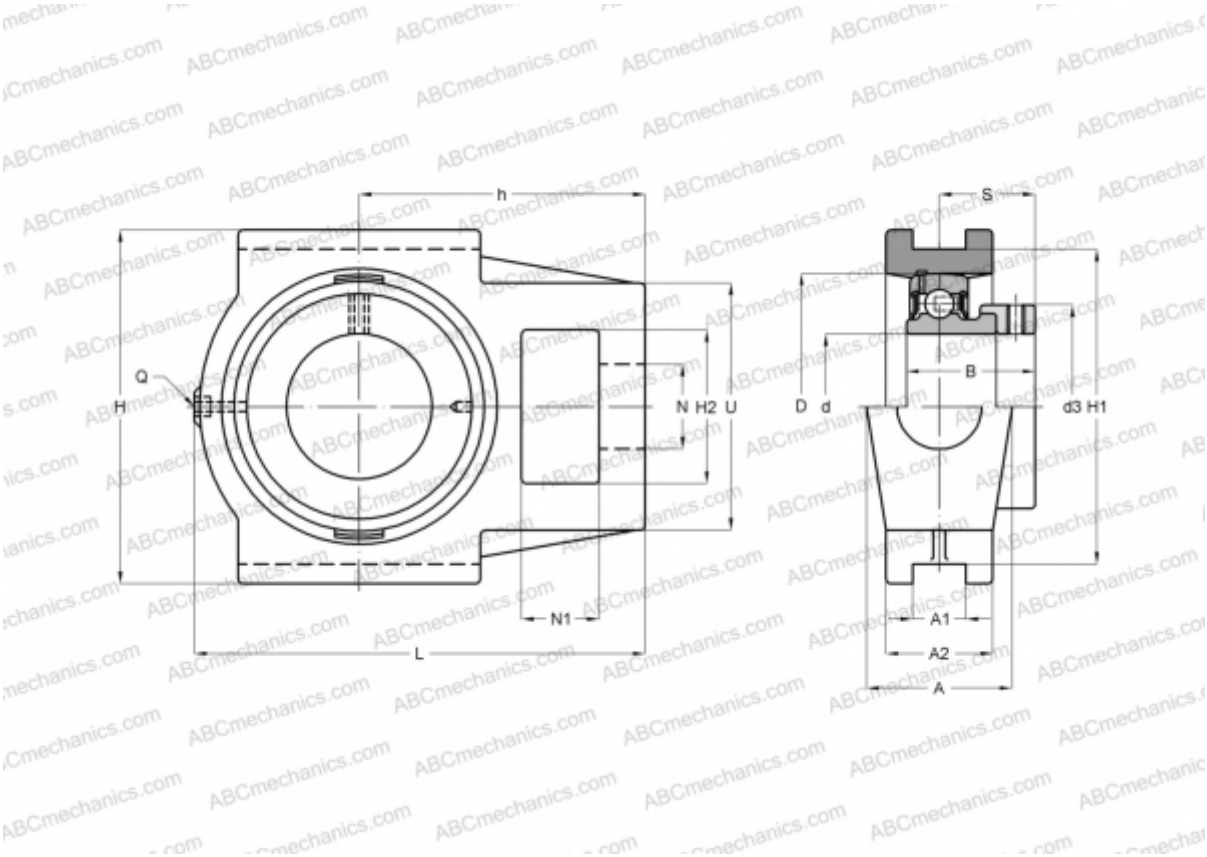

Technical specification

DIMENSIONS, MM	
d	30,000
D	62,000
B	35,800
L	114,500
H	102,000
A	37,000
H2	36,500
A1	12,000
A2	25,000
H1	89,000
N	22,000
N1	18,000
S	26,700
d3	44,000
U	56,000

DIMENSIONS, MM	
h	70,000
Q	Rp1/8
WEIGHT, KG	1,190
Bearing	GRAE30-NPP-B
Housing	GG.TUE06
MANUFACTURER	INA
CALCULATION DATA	
Basic dynamic load rating, C	19,500 kN
Basic static load rating, Co	11,300 kN