RTUE55 INA

Ball bearing units

TYPE: Housing units, Take-up housing units, Cast iron housing, Radial insert ball bearing with eccentric locking collar, Type RTUE (INA)

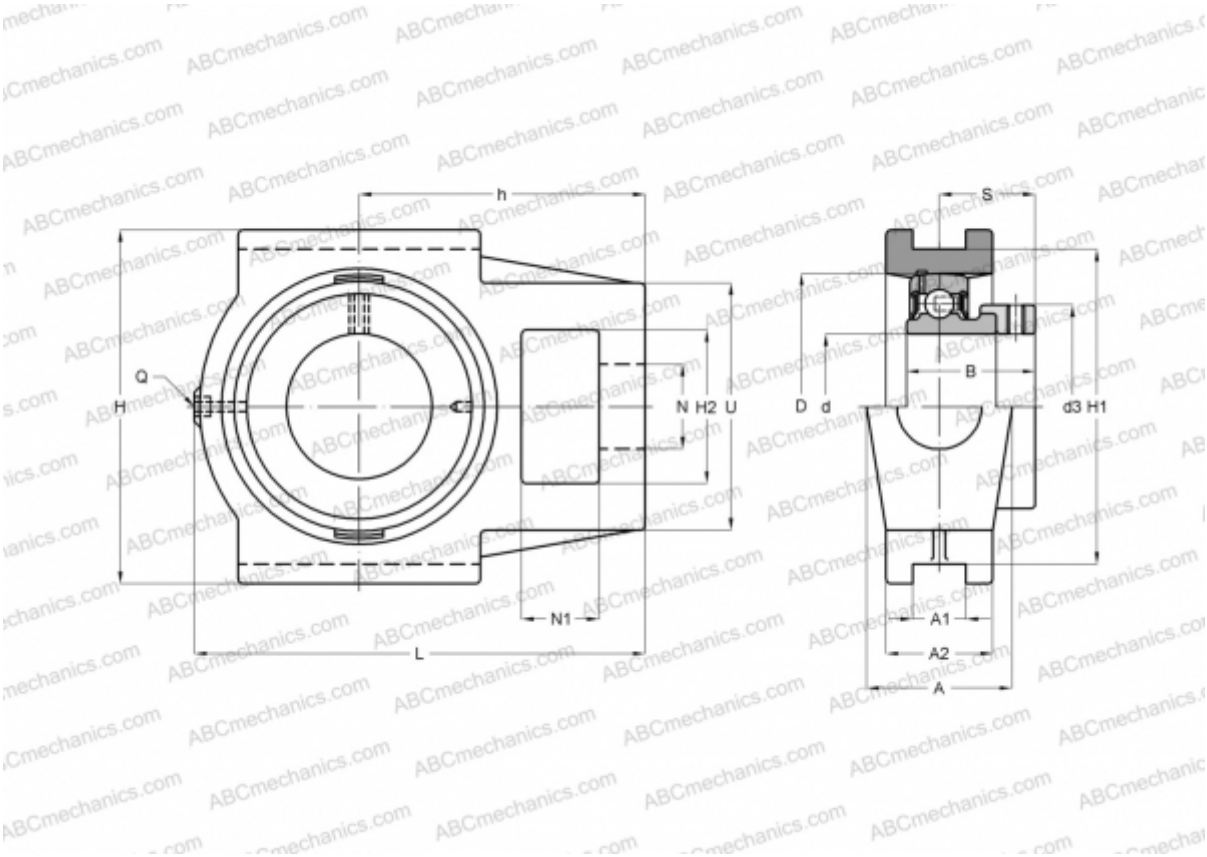

Technical specification

DIMENSIONS, MM	
d	55,000
D	100,000
B	71,400
L	169,000
H	145,000
A	60,000
H2	63,500
A1	22,000
A2	42,000
H1	130,000
N	35,000
N1	26,000
S	43,600
d3	76,000
U	102,000

DIMENSIONS, MM	
h	104,000
Q	Rp1/8
WEIGHT, KG	4,600
Bearing	GE55-KRR-B
Housing	GG.TUE11
MANUFACTURER	INA
CALCULATION DATA	
Basic dynamic load rating, C	43,500 kN
Basic static load rating, Co	29,000 kN