THE40 INA

Ball bearing units

TYPE: Housing units, Take-up housing units, Cast iron housing, Radial insert ball bearing with eccentric locking collar, Type THE (INA)

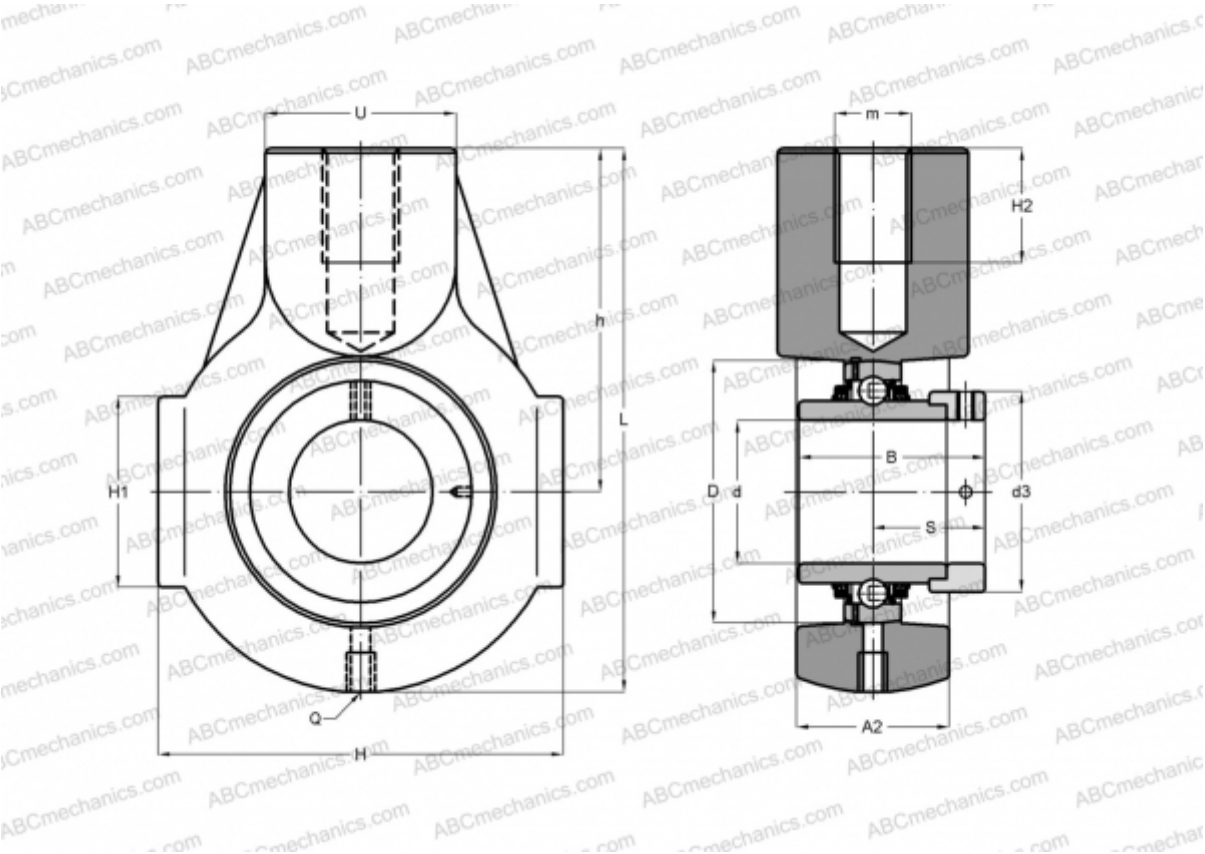

Technical specification

DIMENSIONS, MM	
d	40,000
D	80,000
B	56,500
L	135,000
H	100,000
H2	24,000
A2	36,000
H1	45,000
S	35,100
d3	58,000
U	40,000
h	85,000
Q	Rp1/8
WEIGHT, KG	1,800

Bearing	GE40-KTT-B
Housing	GG.HE08
MANUFACTURER	INA
CALCULATION DATA	
Basic dynamic load rating, C	32,500 kN
Basic static load rating, Co	19,800 kN