RTUEY70 INA

Ball bearing units

TYPE: Housing units, Take-up housing units, Cast iron housing, Radial insert ball bearing with grub screws in inner ring, Type RTUEY (INA)

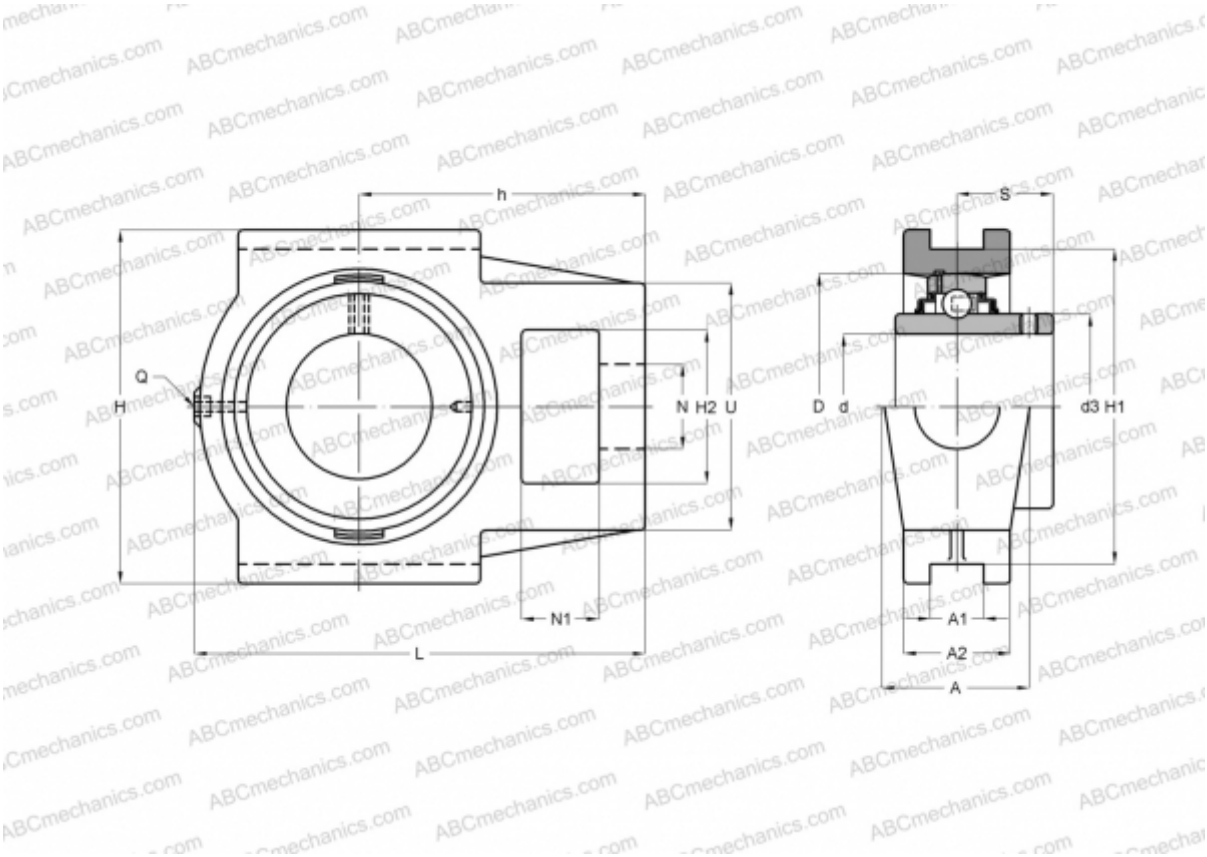

Technical specification

DIMENSIONS, MM	
d	70,000
D	125,000
B	74,600
L	214,000
H	166,000
A	70,000
H2	70,000
A1	25,000
A2	50,000
H1	151,000
N	41,000
N1	35,000
S	44,400
U	110,000
h	135,000

DIMENSIONS, MM	
Q	Rp1/8
WEIGHT, KG	6,690
Bearing	GYE70-KRR-B
Housing	GG.TUE13/14
MANUFACTURER	INA
CALCULATION DATA	
Basic dynamic load rating, C	62,000 kN
Basic static load rating, Co	44,000 kN