PHUSE25 INA

Ball bearing units

TYPE: Housing units, Take-up housing units, Cast iron and sheet steel housing, Radial insert ball bearing with eccentric locking collar, Type PHUSE (INA)

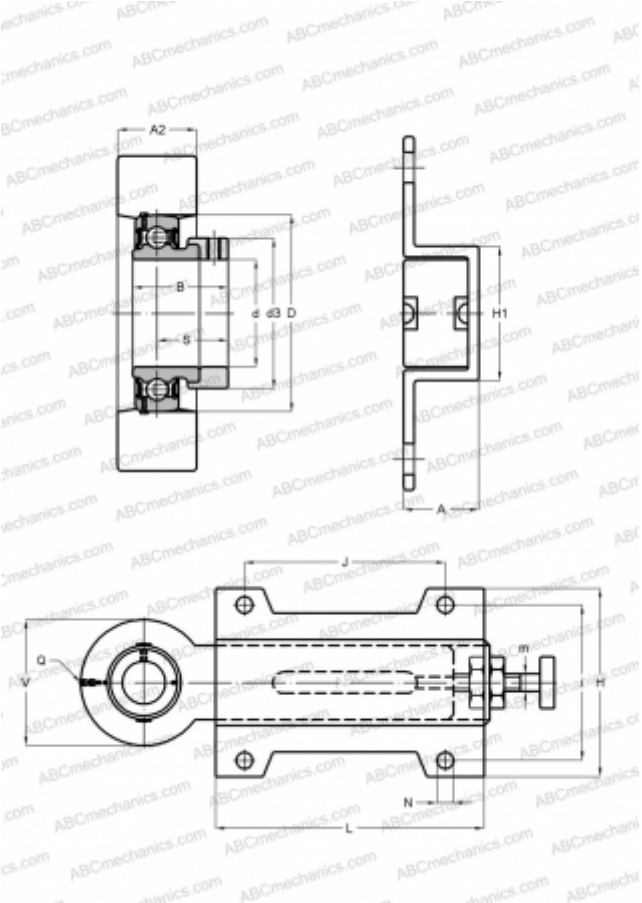

Technical specification

DIMENSIONS, MM	
d	25,000
D	52,000
B	31,000
L	187,000
H	103,000
A	28,000
J	140,000
A2	22,000
H1	52,000
N	11,500
S	23,500
d3	37,500
V	78,000
I	80,000
Q	Rp1/8
WEIGHT, KG	2,070
Bearing	GRAE25-NPP-B
Housing	HUE05 / HUSE07
MANUFACTURER	INA
CALCULATION DATA	
Basic dynamic load rating, C	14,000 kN
Basic static load rating, Co	7,800 kN