USPA203 SNR

Ball bearing units

TYPE: Housing units, Plummer block, Narrow cast iron housing, Radial insert ball bearing with grub screws in inner ring, With inner ring extended at one side, wide base, massive bearing units

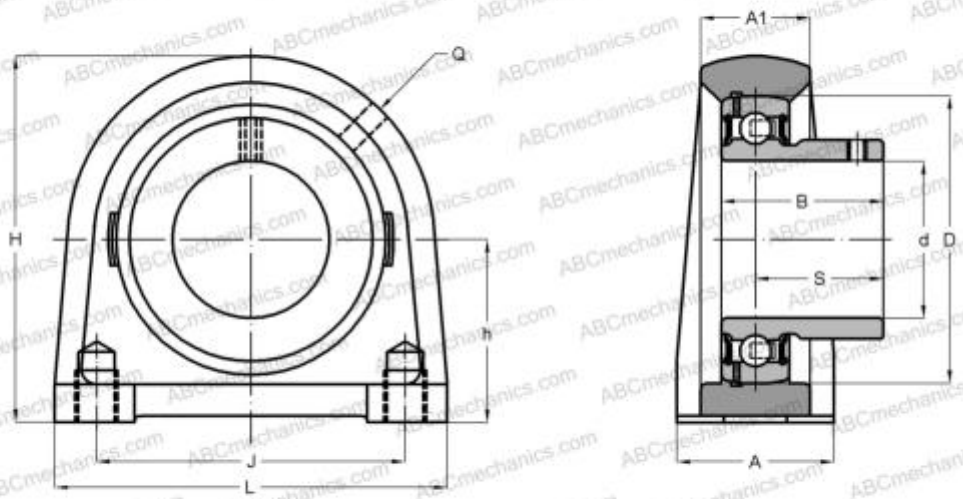

Technical specification

DIMENSIONS, MM	
d	17,000
D	40,000
B	22,000
L	70,000
H	57,000
A	36,000
J	48,000
A1	19,000
H1	10,000
S	16,000
h	30,200
Q	M6x1
WEIGHT, KG	0,400

Bearing	US203
Housing	PA203
MANUFACTURER	SNR
INTERCHANGE	
ABC	USPA203
CALCULATION DATA	
Basic dynamic load rating, C	9,550 kN
Basic static load rating, Co	4,780 kN
Operating temperature min	-20 °C
Operating temperature max	110 °C