UCEHE201 SNR

Ball bearing units

TYPE: Housing units, Take-up housing units, Cast iron housing, Radial insert ball bearing with grub screws in inner ring, With inner ring extended on both sides, bracket

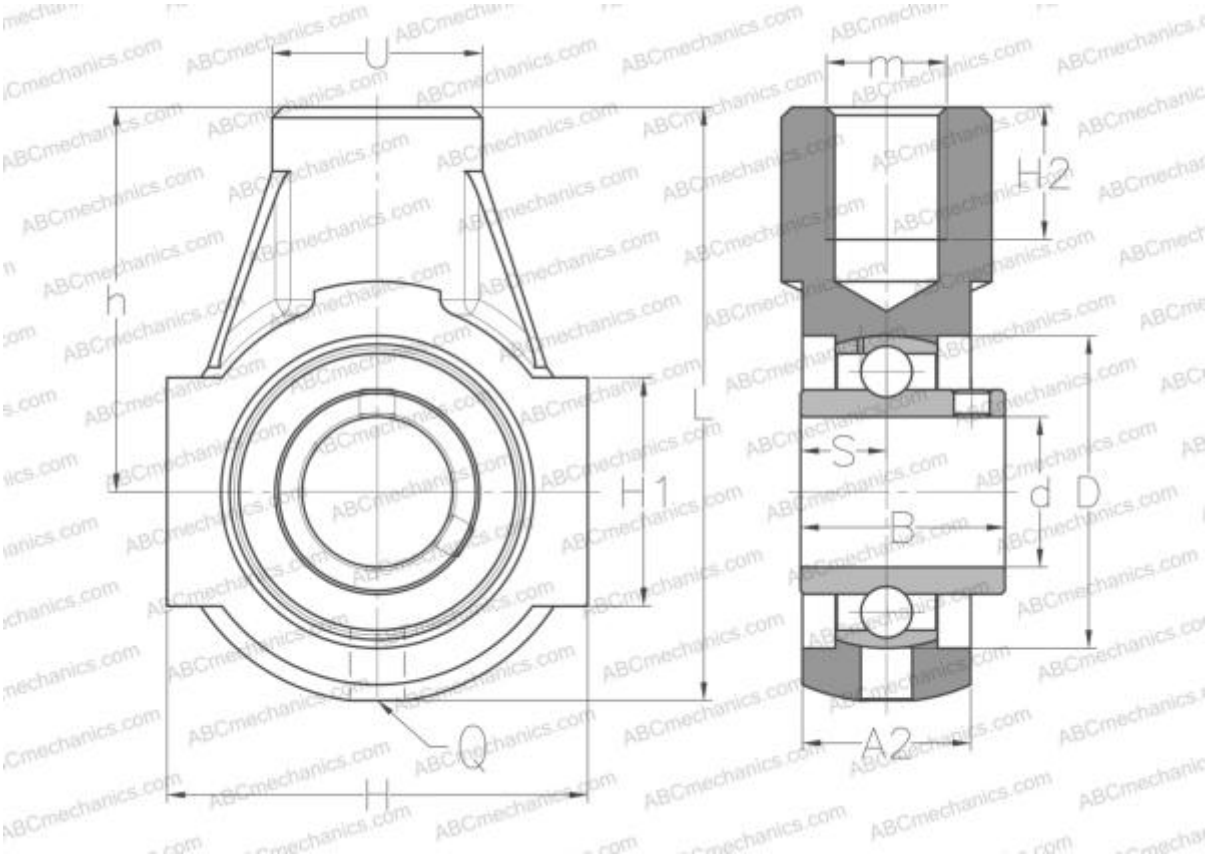

Technical specification

DIMENSIONS, MM	
d	12,000
D	47,000
B	31,000
L	91,000
H	65,000
H2	21,000
A2	25,000
H1	38,000
S	12,700
U	30,000
h	58,000
m	M16
Q	R1/8"
WEIGHT, KG	0,800

Bearing	UC201
Housing	EHE204
MANUFACTURER	SNR
INTERCHANGE	
ABC	UCEHE201
SLB	UCHA201
FYH	UCHA201
NTN	UCHB 201 D1
CALCULATION DATA	
Basic dynamic load rating, C	12,800 kN
Basic static load rating, Co	6,650 kN
Operating temperature min	-20 °C
Operating temperature max	110 °C