CUCF 202C ASAHI

Ball bearing units

TYPE: Housing units, Four-bolt flanged housing units, Cast iron housing, Radial insert ball bearing with grub screws in inner ring, Type CUCF..C with cast iron covers, open cover (ASAHI)

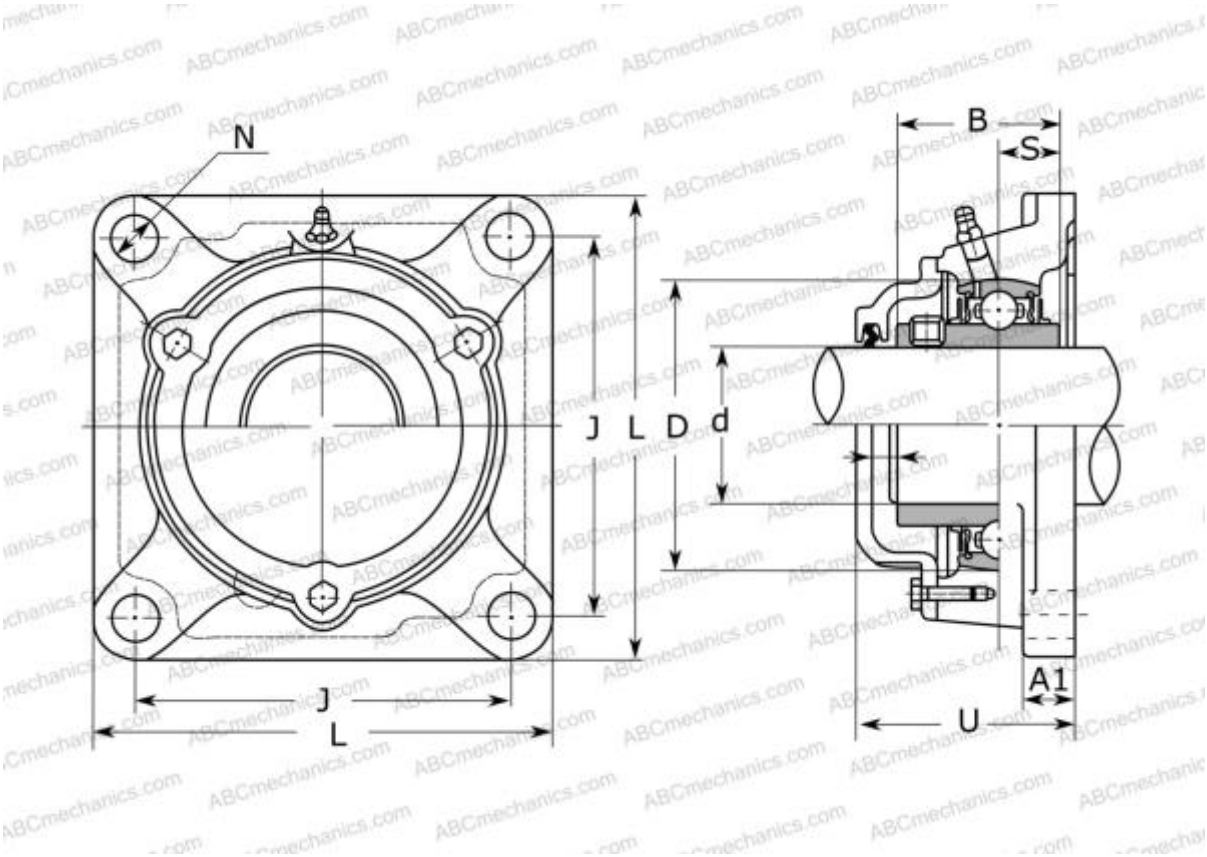

Technical specification

DIMENSIONS, MM	
d	15,000
D	47,000
B	31,000
L	86,000
J	64,000
A1	12,000
N	12,000
S	12,700
U	46,000

WEIGHT, KG	1,000
Bearing	UC 202
Housing	CF 204

MANUFACTURER	ASAHI

INTERCHANGE	
ASAHI	CF 204 + UC 202