CUCF 206C ASAHI

Ball bearing units

TYPE: Housing units, Four-bolt flanged housing units, Cast iron housing, Radial insert ball bearing with grub screws in inner ring, Type CUCF..C with cast iron covers, open cover (ASAHI)

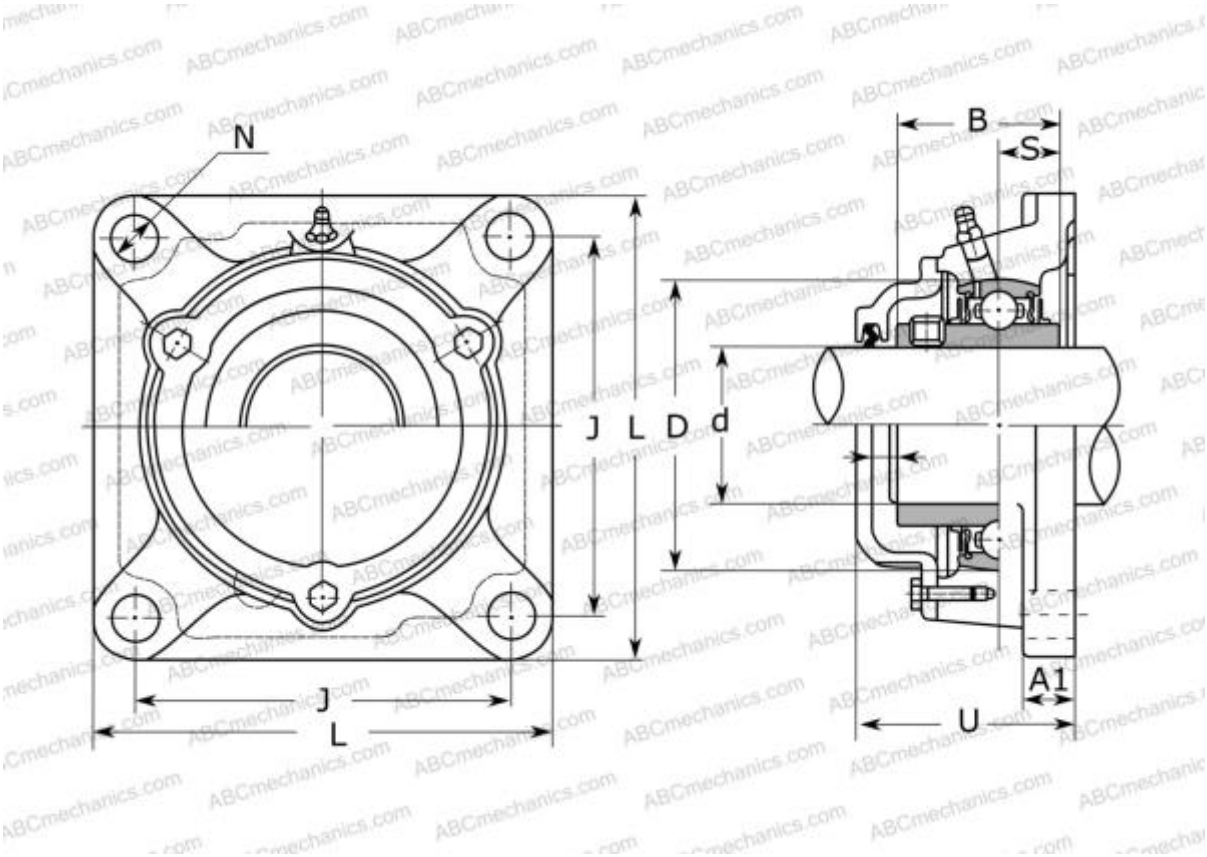

Technical specification

DIMENSIONS, MM	
d	30,000
D	62,000
B	38,100
L	108,000
J	83,000
A1	14,000
N	12,000
S	15,900
U	55,000

WEIGHT, KG	1,600
Bearing	UC 206
Housing	CF 206

MANUFACTURER	ASAHI

INTERCHANGE	
ASAHI	CF 206 + UC 206