CUCF 207CE ASAHI

Ball bearing units

TYPE: Housing units, Four-bolt flanged housing units, Cast iron housing, Radial insert ball bearing with grub screws in inner ring, Type CUCF..CE with cast iron covers, closed cover (ASAHI)

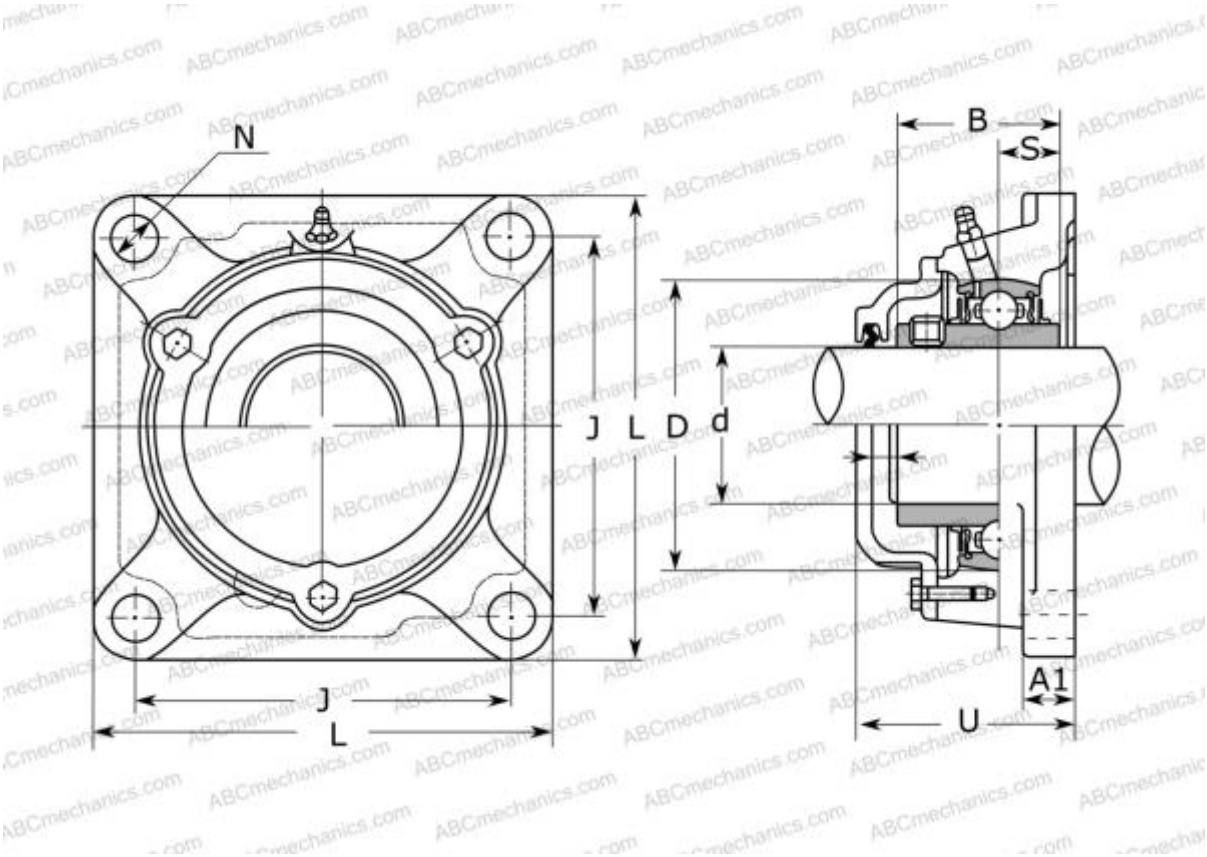

Technical specification

DIMENSIONS, MM	
d	35,000
D	72,000
B	42,900
L	117,000
J	92,000
A1	16,000
N	14,000
S	17,500
U	59,000

WEIGHT, KG	2,100
Bearing	UC 207
Housing	CF 207

MANUFACTURER	ASAHI

INTERCHANGE	
ASAHI	CF 207 + UC 207