UCFC 202C ASAHI

Ball bearing units

TYPE: Housing units, Four-bolt flanged housing units, Cast iron housing, Radial insert ball bearing with grub screws in inner ring, Type UCFC..C with pressed steel covers, open cover (ASAHI)

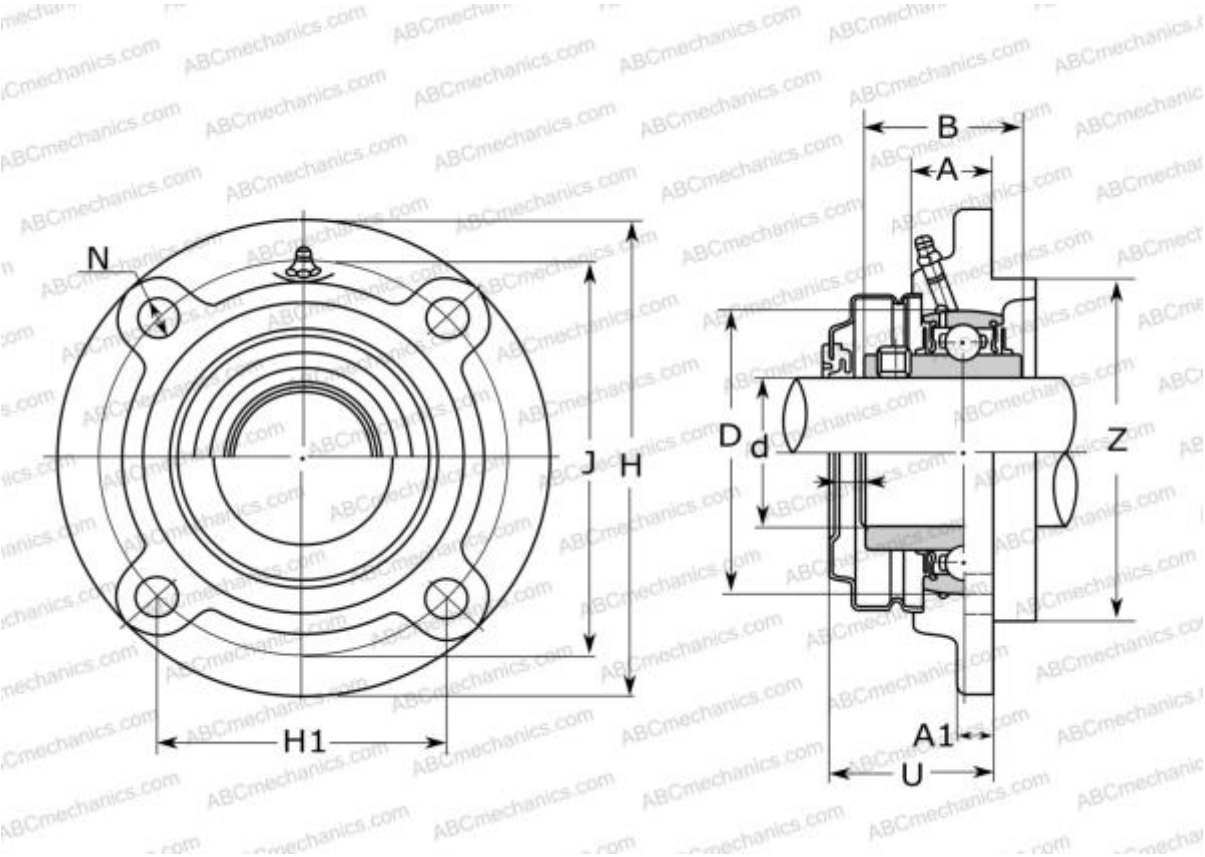

Technical specification

DIMENSIONS, MM	
d	15,000
D	47,000
B	31,000
H	100,000
A	20,500
J	78,000
A1	7,000
H1	55,100
N	12,000
U	38,000
Z	62,000
WEIGHT, KG	0,900
Bearing	UC 202
Housing	FC 204C
MANUFACTURER	ASAHI

INTERCHANGE	
ASAHI	FC 204C + UC 202