UCFC 209E ASAHI

Ball bearing units

TYPE: Housing units, Four-bolt flanged housing units, Cast iron housing, Radial insert ball bearing with grub screws in inner ring, Type UCFC..E with pressed steel covers, closed cover (ASAHI)

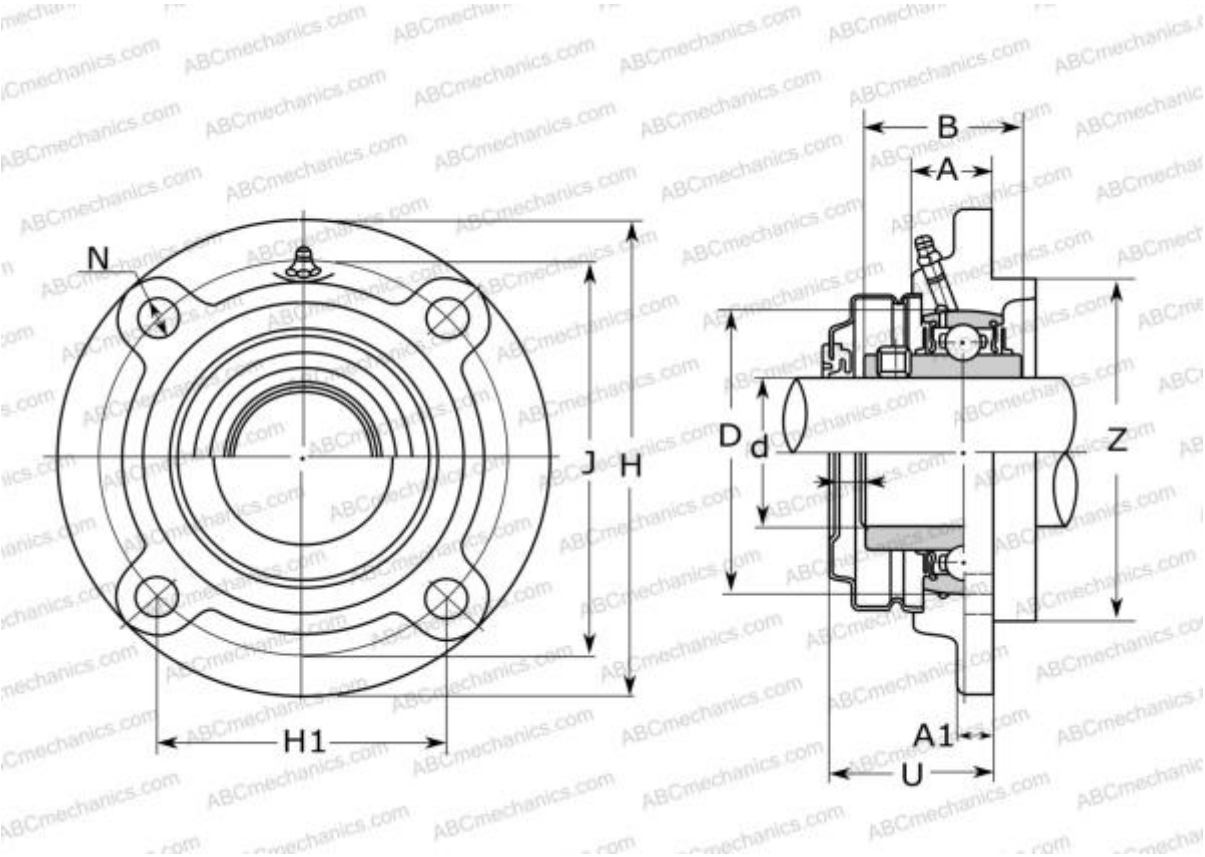

Technical specification

DIMENSIONS, MM	
d	45,000
D	85,000
B	49,200
H	160,000
A	26,000
J	132,000
A1	14,000
H1	93,300
N	16,000
U	51,000
Z	105,000
WEIGHT, KG	3,100
Bearing	UC 209
Housing	FC 209C
MANUFACTURER	ASAHI

INTERCHANGE	
ASAHI	FC 209C + UC 209