UKF X09 + H2309 ASAHI

Ball bearing units

TYPE: Housing units, Four-bolt flanged housing units, Cast iron housing, Radial insert ball bearing with adapter sleeve, Type UKFX (ASAHI)

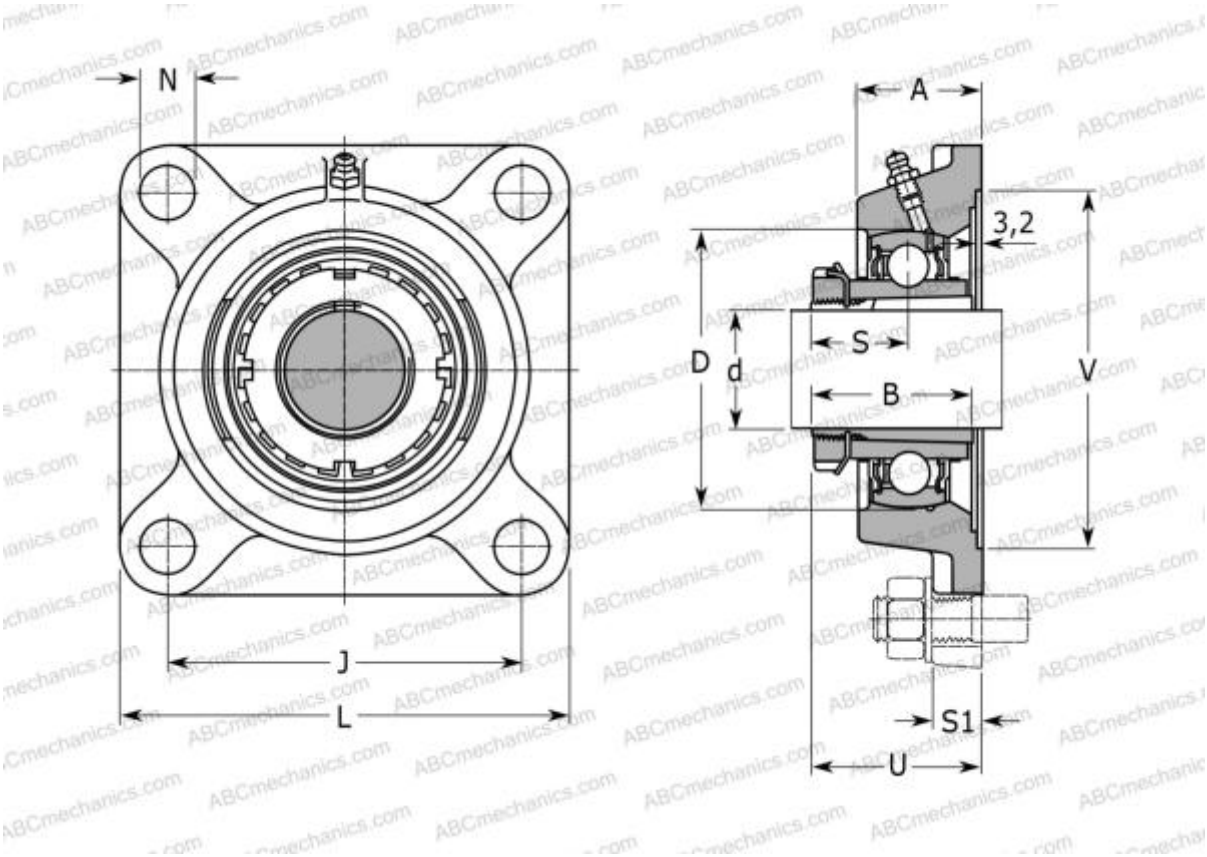

Technical specification

DIMENSIONS, MM	
d	40,000
D	90,000
B	50,000
L	143,000
A	40,000
J	111,000
A1	14,000
A2	23,000
N	19,000
U	49,500
WEIGHT, KG	2,400
Bearing	UK X09
Housing	F X09
Adapter sleeve	H2309
MANUFACTURER	ASAHI

INTERCHANGE	
ASAHI	F X09 + UK X09 + H2309